Exam Date & Time: 08-Dec-2023 (09:30 AM - 12:30 PM)

MANIPAL ACADEMY OF HIGHER EDUCATION

FIRST SEMESTER B.TECH. DEGREE EXAMINATIONS - NOVEMBER / DECEMBER 2023
SUBJECT: CIE 1071 / CIE-1071 - MECHANICS OF SOLIDS

MECHANICS OF SOLIDS [CIE 1071]

Marks: 50 **Duration: 180 mins.**

A

Answer all the questions.

1A) Four coplanar forces acting at a point are shown in Figure. Determine the unknown force P and its inclination with the x-axis. The resultant has a magnitude of 500 N and is acting along the x-axis. (5)

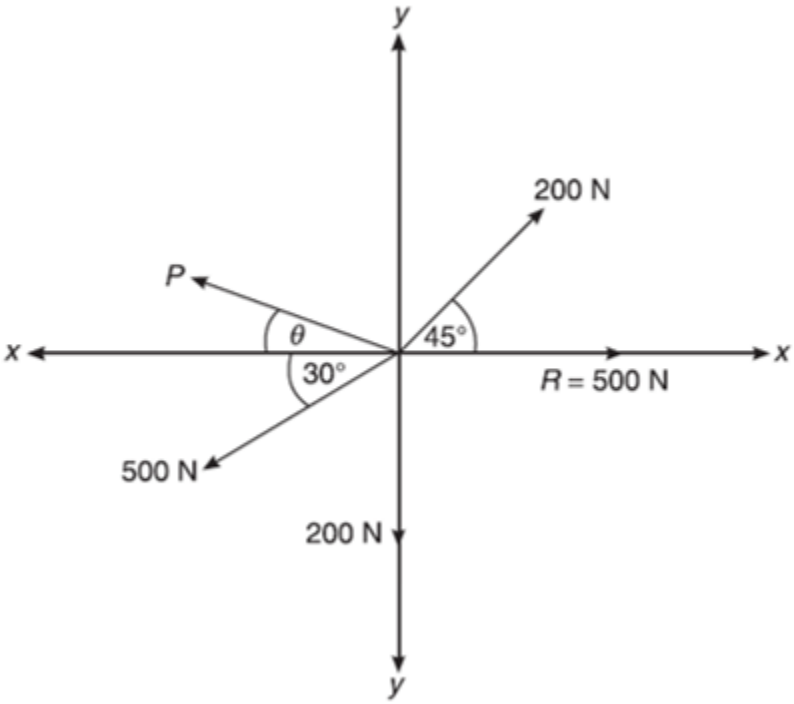

1B) A uniform ladder 4 m long weighs 200 N. It is placed against a wall making an angle of 60° with the floor as shown in Figure. The coefficient of friction between the wall and the ladder is 0.25 and that between the ground and the ladder is 0.35. The ladder in addition to its own weight, has to support a man of 1000 N at the top at B. Calculate the minimum horizontal force to be applied at A to prevent slipping (5)

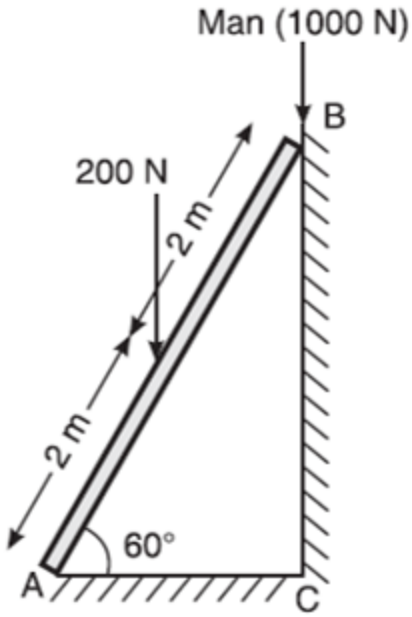

2A) Derive an expression of moment of inertia of a circle about the centroidal axis. (2)

2B) Determine the second moment of the area with respect to horizontal centroidal axis. (All dimensions are in mm).

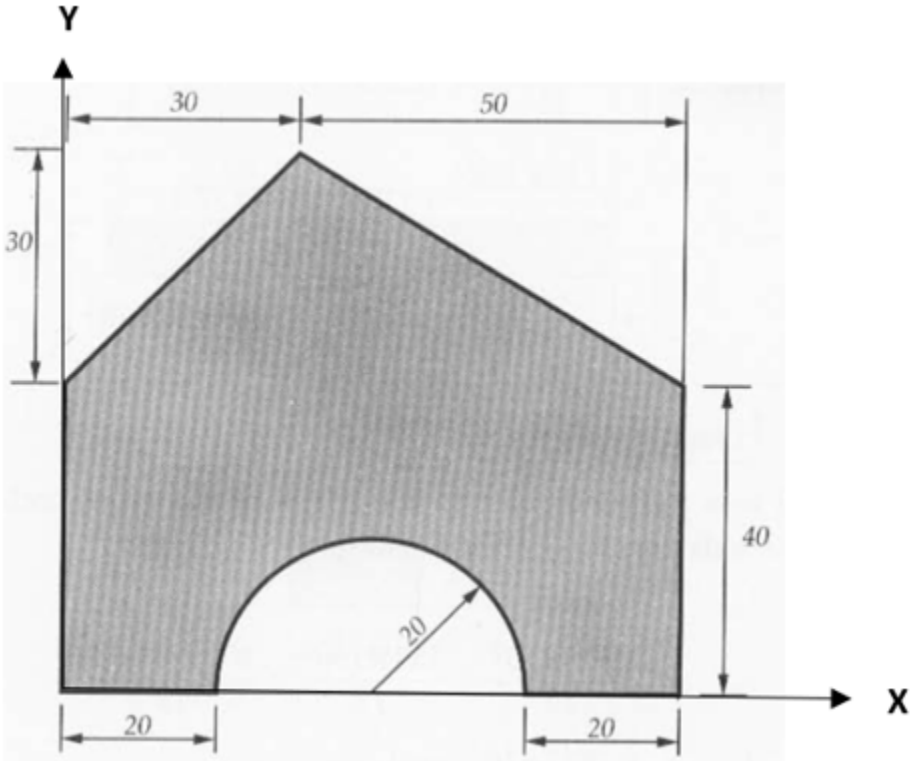

(5)

2C) With the help of neat sketches, define the following terms:
i) Centroid
ii) Radius of gyration. (3)

3A) A thin cylindrical shell is 4m long and 1m in internal diameter. It is subjected to internal pressure of 1.5 MPa. If the thickness of the sheet is 10 mm, find the circumferential (5)

stress, longitudinal stress, changes in diameter, length and volume . Take E=210 GPa and μ= 0.3.

3B) A metallic bar 300mm × 150mm × 50mm is loaded as shown in the figure. Find the change in each dimension and total volume. Take E = 200GPa, Poisson's ratio, μ = 0.3 (5)

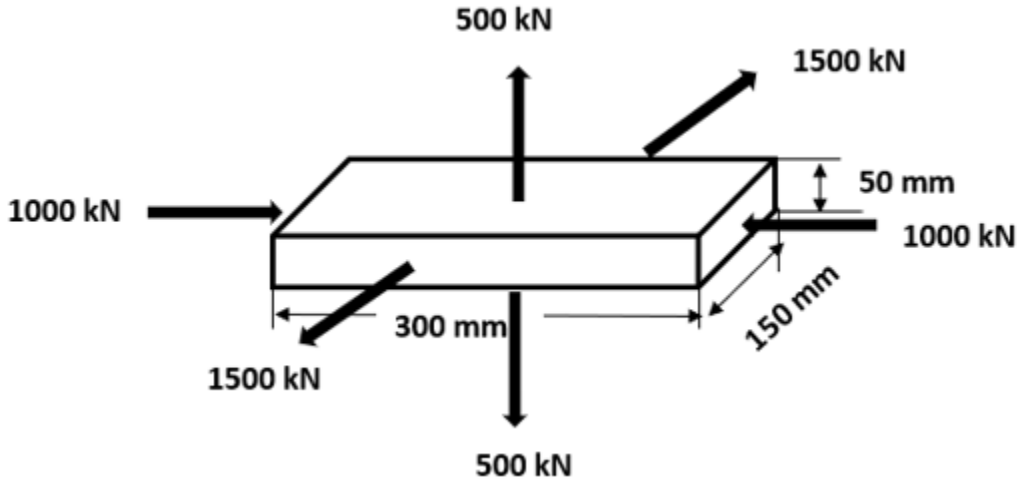

4A) A composite bar consists of an aluminum section rigidly fastened between a bronze section and a steel section as shown in figure. Axial loads are applied at the positions indicated. Determine the change in each section and the change in total length. Given; E_{st} = 200GPa , E_{al} = 70GPa, E_{br} = 100GPa. Cross sectional area of steel, aluminum and bronze is 130mm^2, 170mm^2 and 150mm^2 respectively. (4)

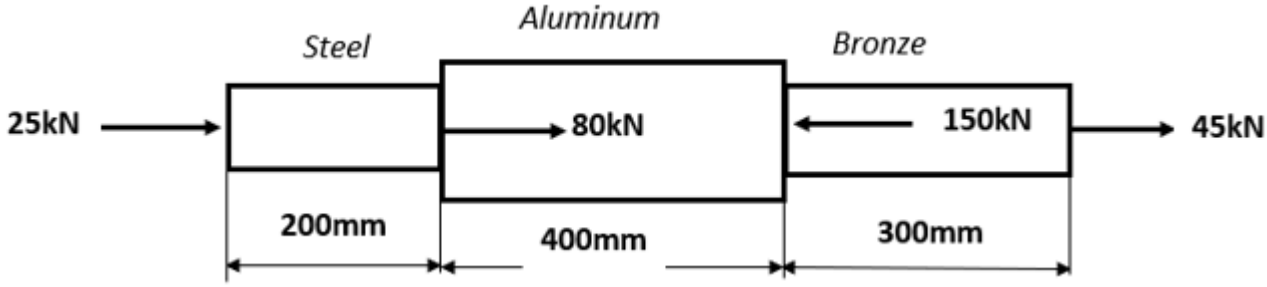

4B) Derive an expression for the total extension of the tapered bar of length L, with circular cross section as shown in figure, when subjected to an axial tensile load W. (3)

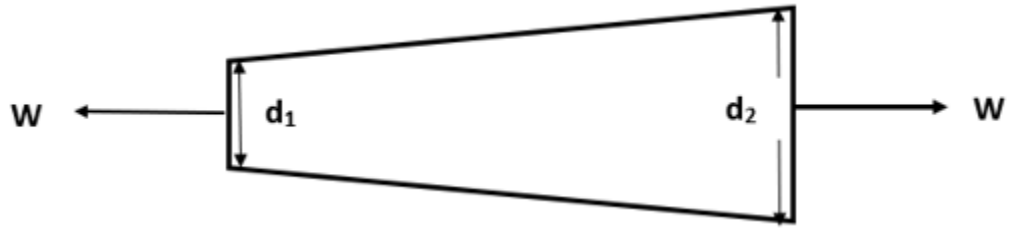

4C) A bar of certain material 40mm×40mm in cross section is subjected to an axial pull of 100kN. The extension over a length of 110mm is 0.05mm and decrease in each side is 0.005mm. Calculate (i) E (ii) μ (iii) G (iv) K (3)

5A) A mild steel rod 6 mm diameter passes centrally through a copper tube of internal diameter 20mm and thickness 5mm. The composite section is 500mm long and their ends are rigidly connected. It is then acted upon by an axial tensile load of 60kN. Find the stresses & deformation in steel and copper. Take E_{cu} = 100GPa, E_s = 200GPa (5)

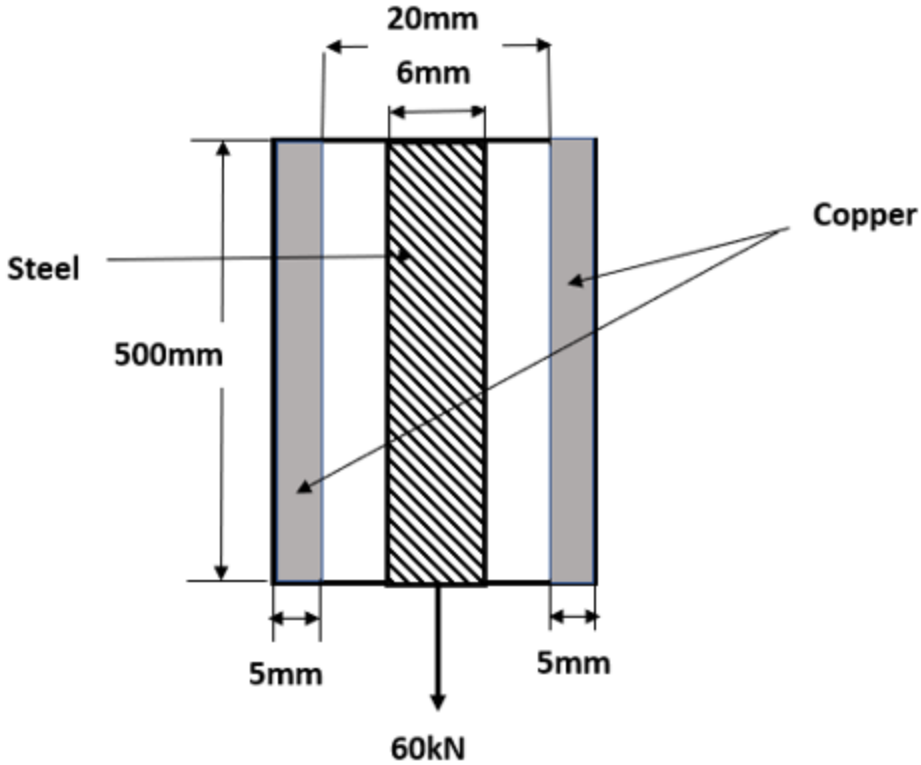

5B) A compound bar made up of steel and copper, is as shown in figure. Cross sectional area of steel and copper are 1000mm^2 and 600 mm^2 respectively. Determine the stresses developed in each material if the temperature is raised by 45˚C under two conditions i)Supports are perfectly rigid ii) Right hand support yields by 0.2mm
Take coefficient of temperature expansion of steel and copper as 12×10^{-6}/ºC and 18×10^{-6}/ºC respectively. $E_{steel} = 2\times10^5$ N/mm^2, $E_{copper} = 1.2\times10^5$ N/mm^2

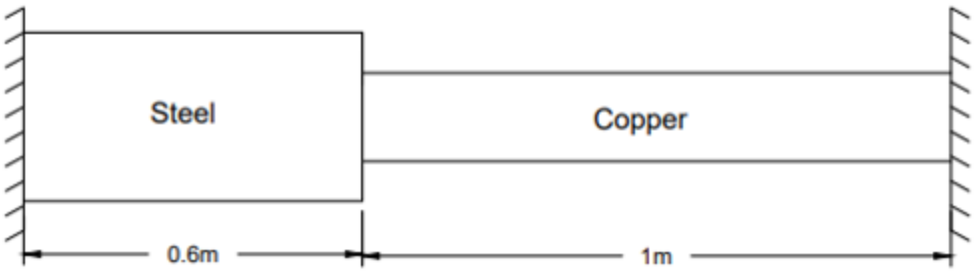

(5)

-----End-----